8. Block Diagram
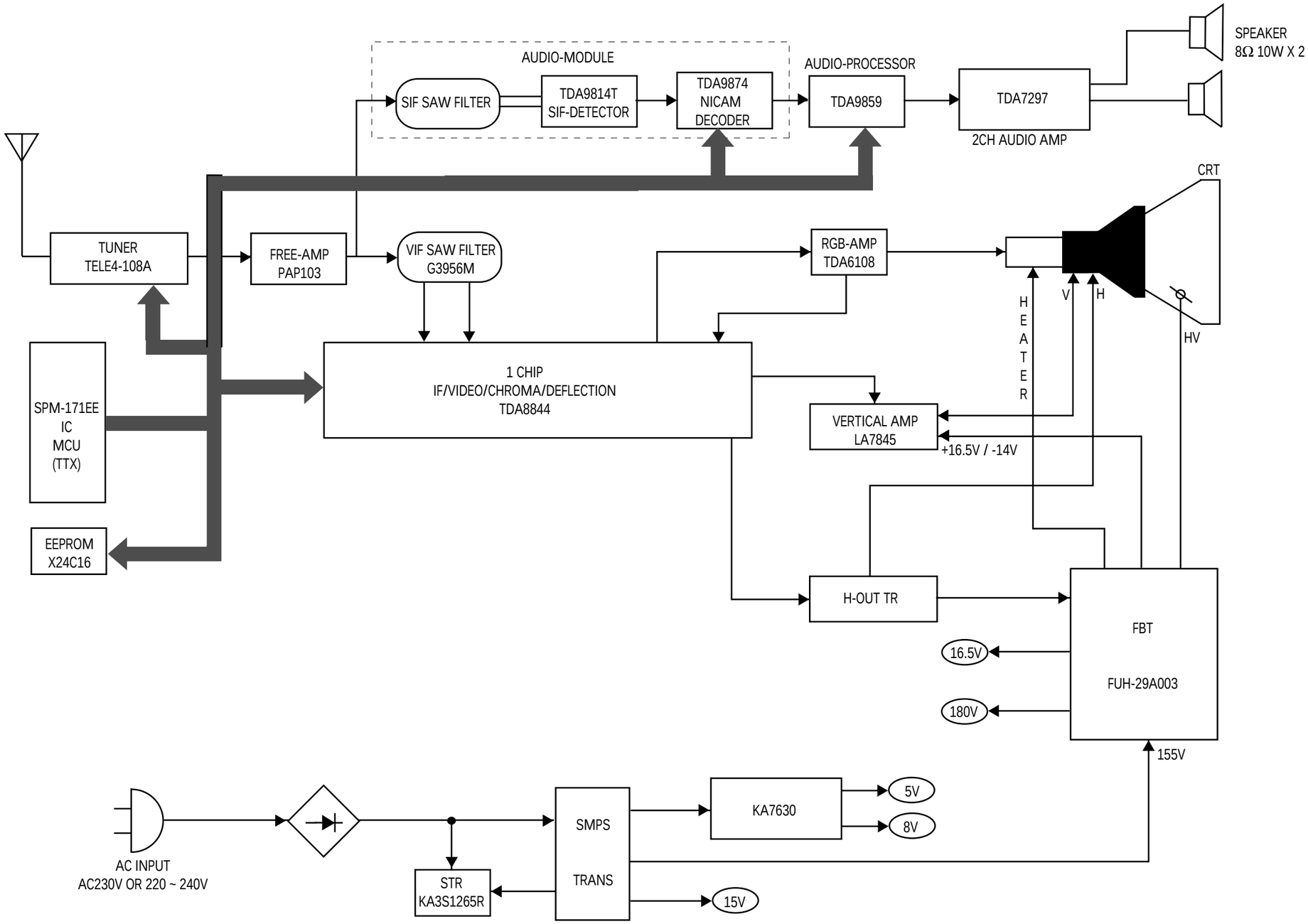
8-1 S51A